Montageanleitung JOOLA Worldcup

	M8x70	2x
	SM8	2x
	M8	2x
	ø 10/8/15	2x
	M6x40	8x
	M6x50	8x
	M6x60	4x
	M6x80	4x
	SM6	24x
	ø 6,4	4x
	ø 15x6,3x15	4x

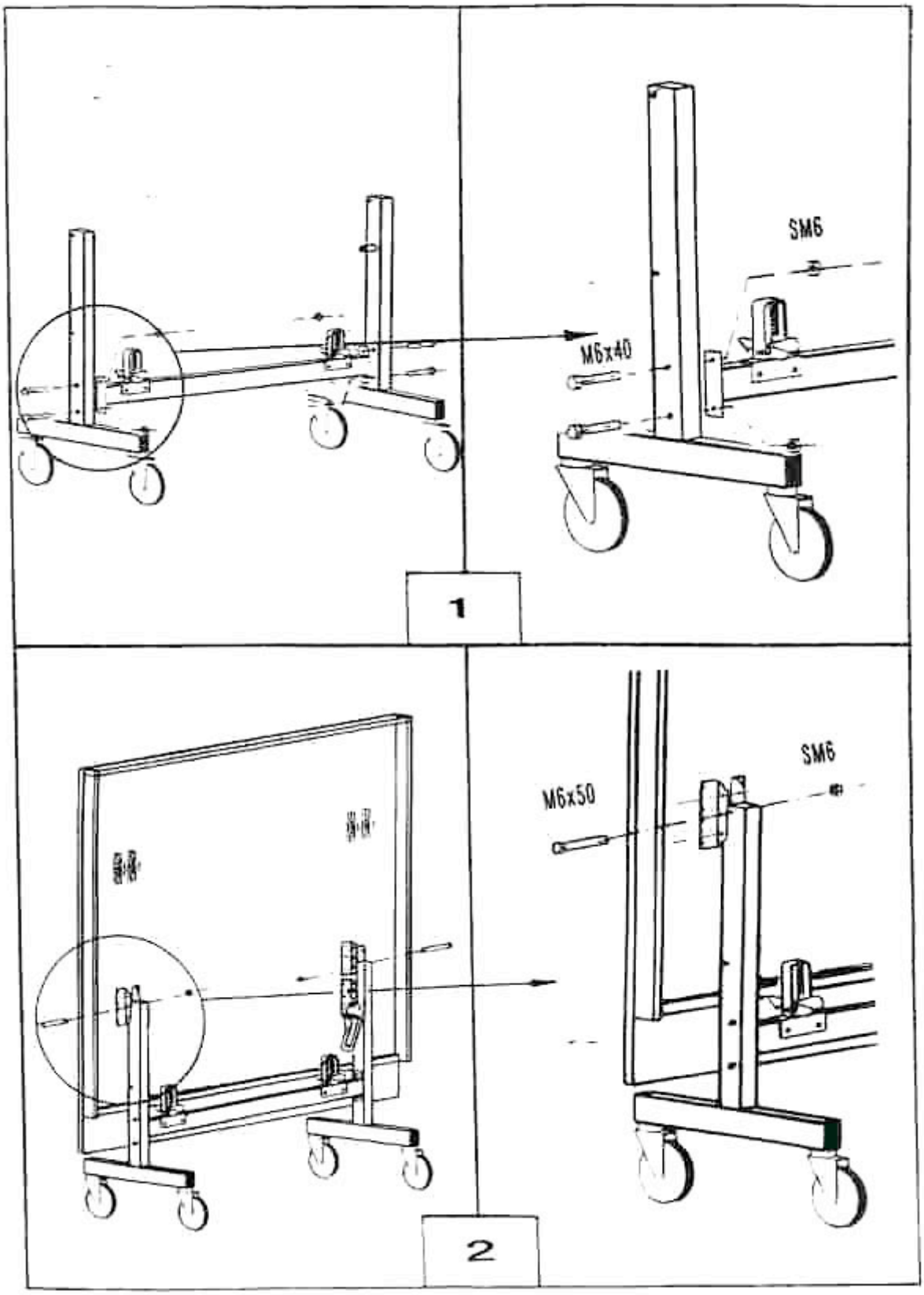
SM6
M6x40
1
M6x50
SM6
2

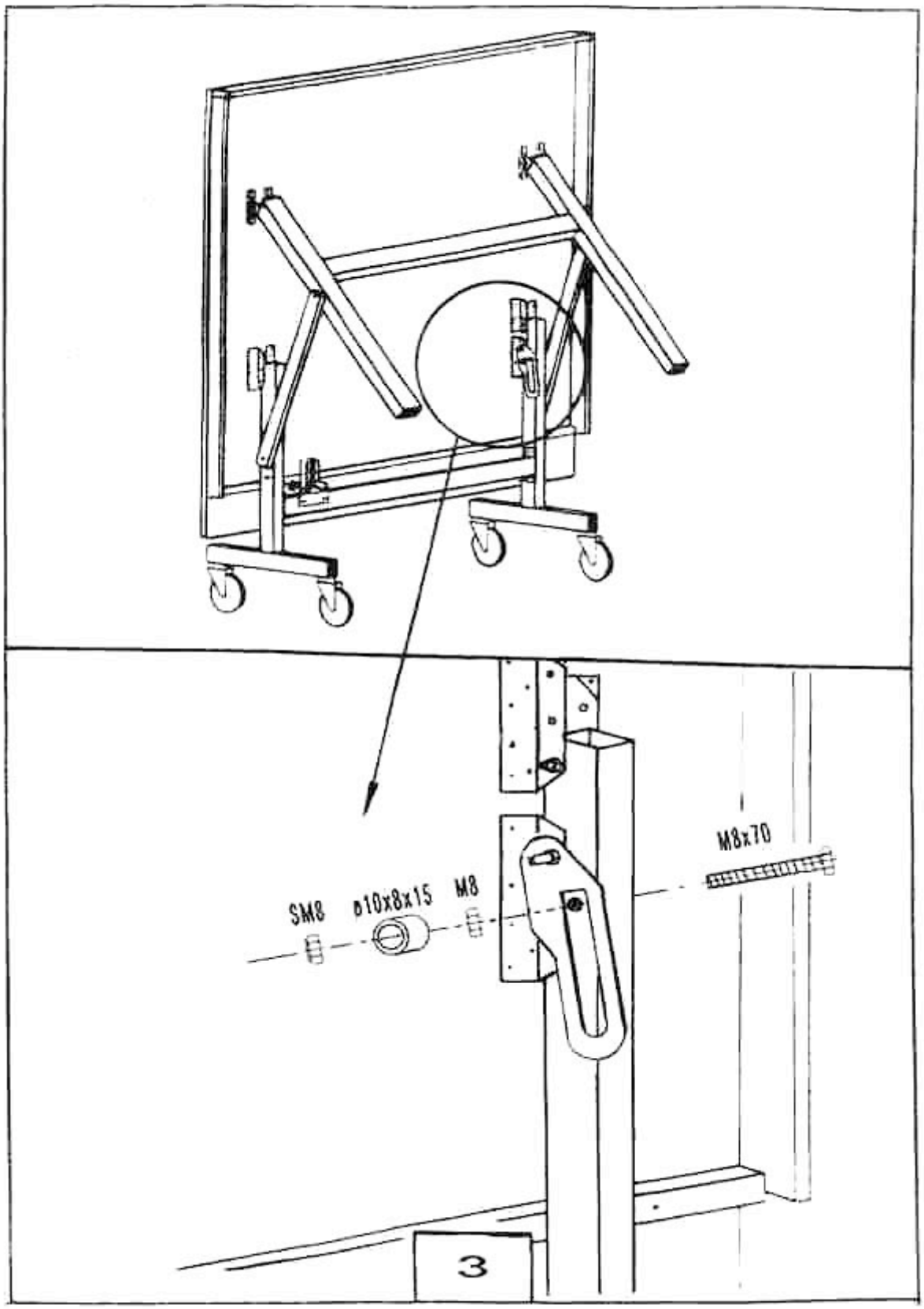
M8x70
SM8
ø10x8x15
M8
3

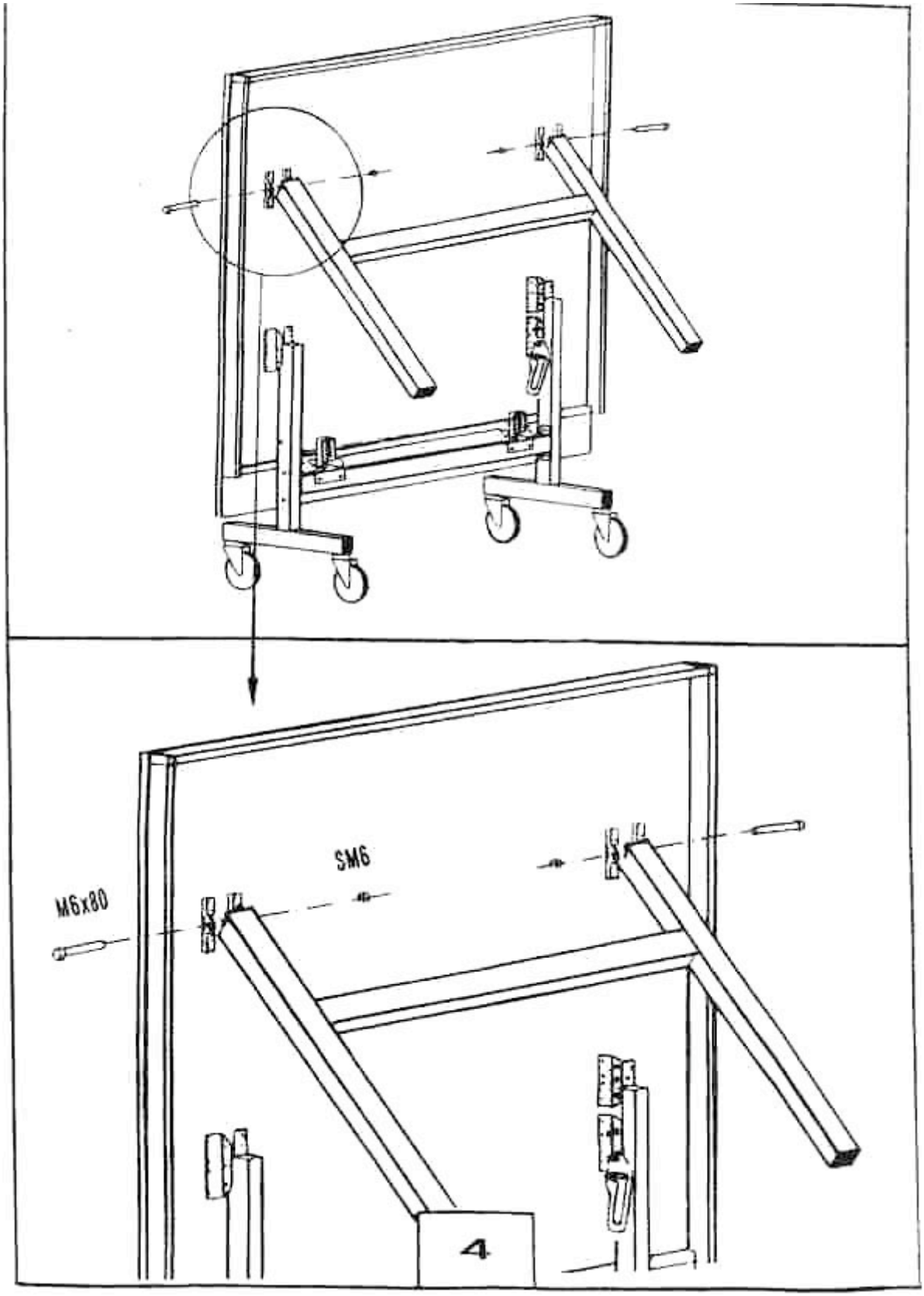
SM6
M6x80
4

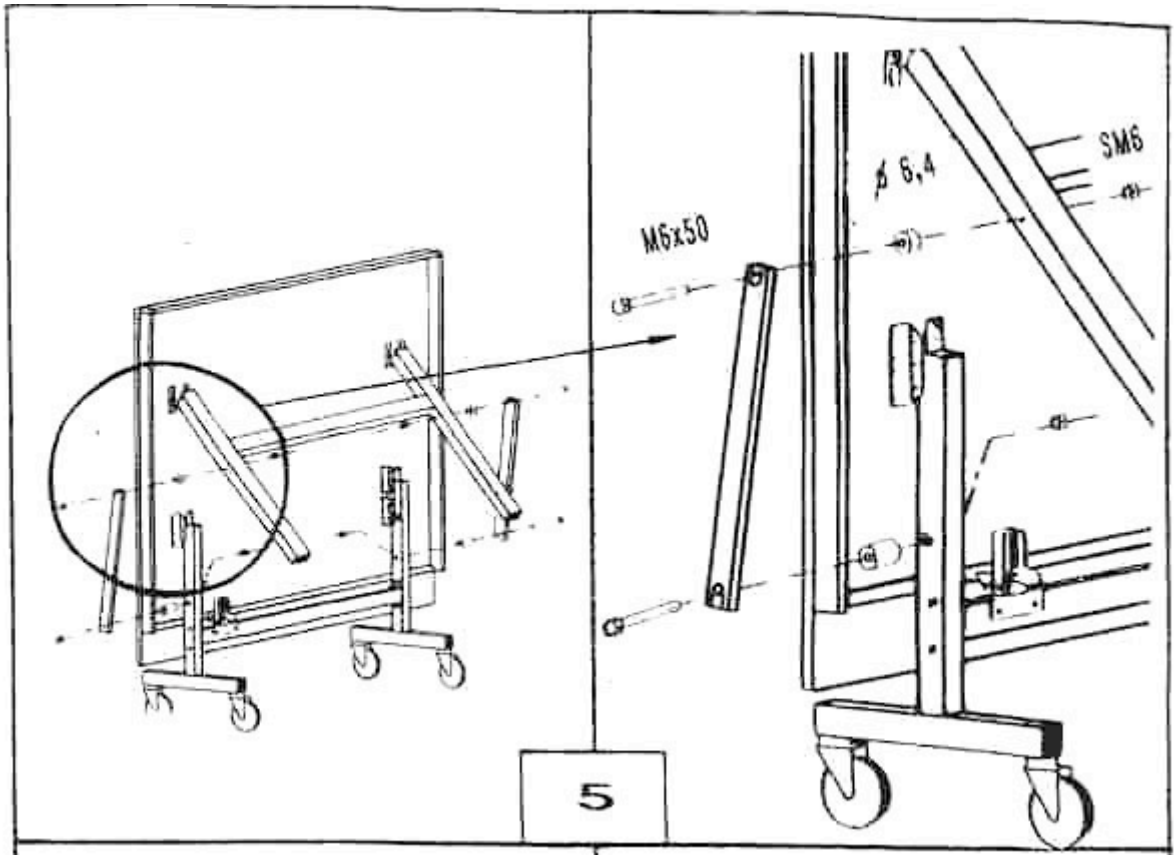

5

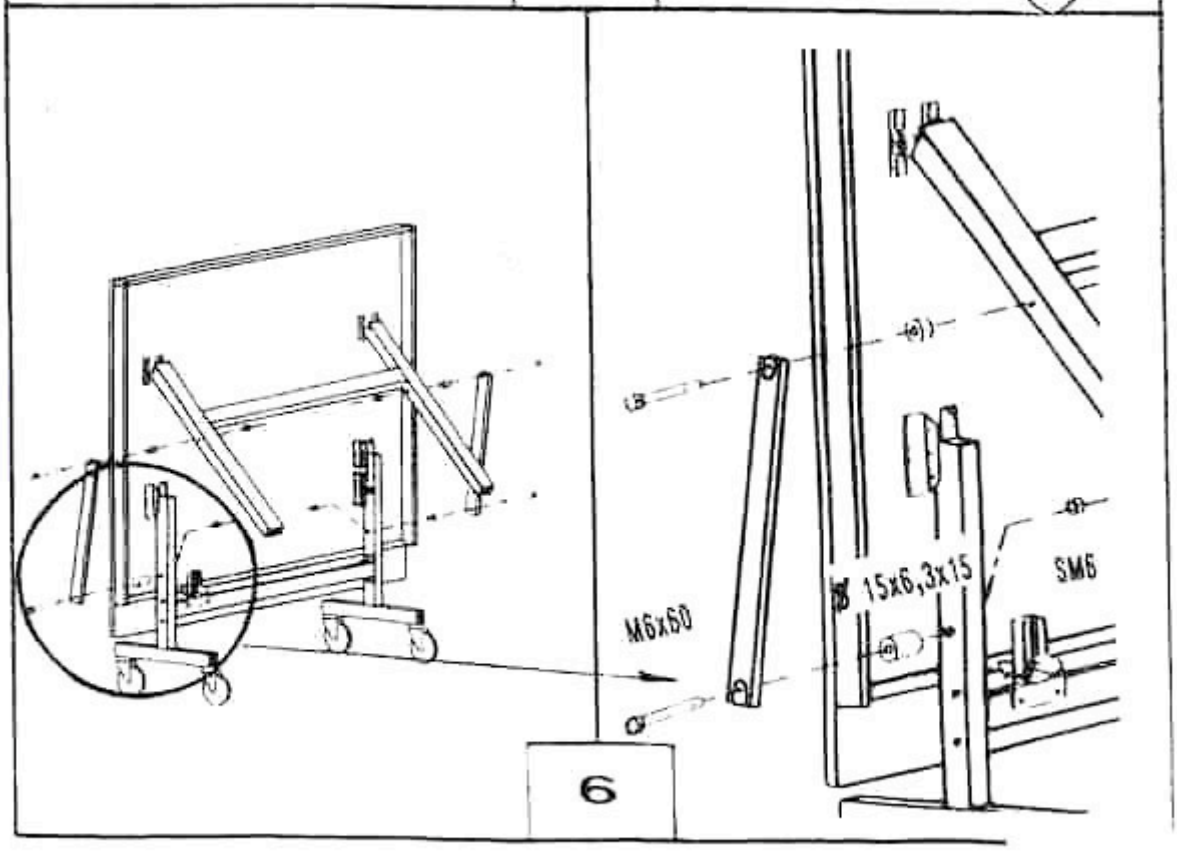

6